MJOLSON@PLATT.COM

DWG. NO. 2C11296 | SHEET 1 | OF 3

G01 - G04

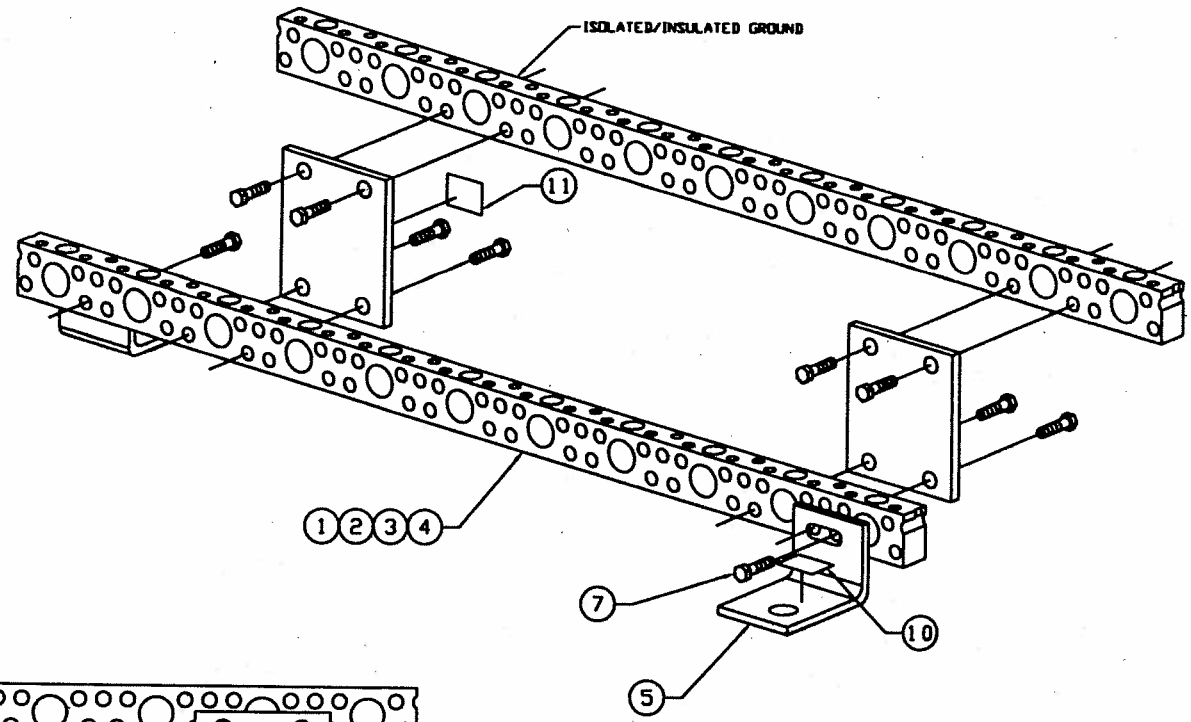

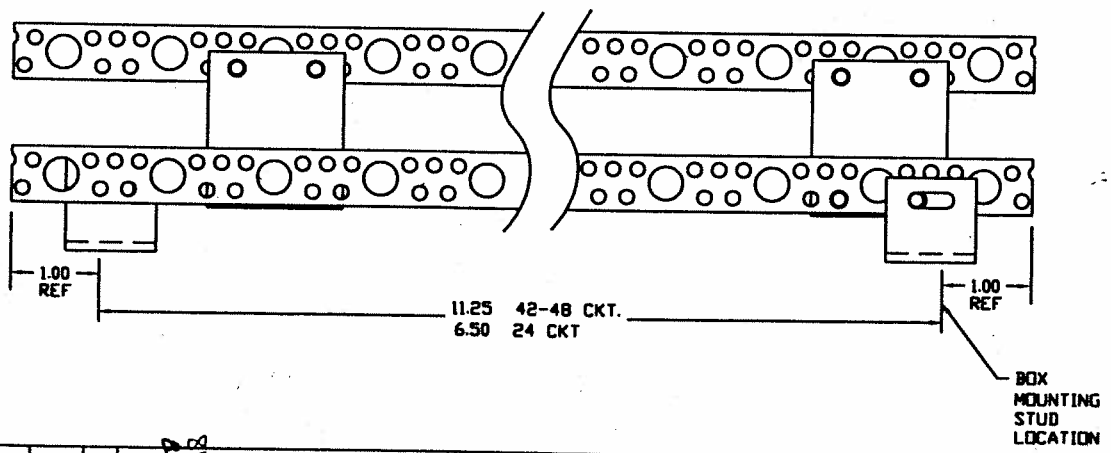

GROUND SIZE		BOX SIZE
6.50"	24 CKT.	27" & BELOW
11.25"	42 CKT.	30" & ABOVE

REF TO DRAWING 8070A01 FOR TOLERANCES.

REV.	REVISION	
1	ITEMS 8 & 9 WERE SHOWN AS PAN HEAD SCREWS. D.FLAX 08/04/97	
2	REDESIGNED REV #1.32. JM Goodman 2/11/98	
3		

ORIGINAL

D.FLAX 06/26/97
P.THOMPSON

THE INFORMATION ON THIS DRAWING IS THE PROPERTY OF EATON CORPORATION. IT IS DISCLOSED IN CONFIDENCE AND IS NOT TO BE REPRODUCED, USED OR DISCLOSED EXCEPT FOR THE PURPOSE FOR WHICH FURNISHED.

EATON

CUTLER-HAMMER
SUMTER, S.C. U.S.A.

ASSEMBLY, GROUND BAR STANDARD AND INSULATED/ISOLATED

SIZE C | CAD FILENAME W2C11296 | DWG. NO. 2C11296

SCALE N.T.S. | PARTS LIST 2C11296 | PRODUCT CODE | SHEET NO. 1 OF 1