CAT. NO.: PDB-55-600-1	TOLERANCES-UNLESS OTHERWISE SPECIFIED 2 PL DEC. ±.015 TRUE C.L. ±.015 3 PL DEC. ±.015 ANGLES ±1	DWG. NO. M2825-22 SHEET 1 OF 1	ILSCO CORP.
MASS:	DRAWN BY: CLH DATE: 12/10/2007	SCALE: SIZE: B	

REV.	DESCRIPTION

Cat #: PDB-55-600-1

NOTES:
1. (1) R1449 LABEL REQUIRED

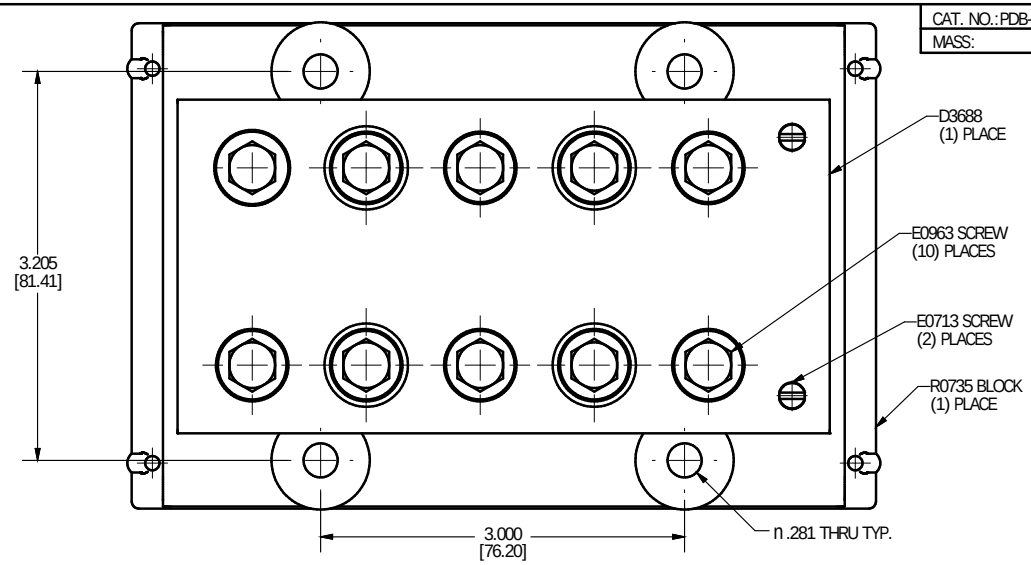

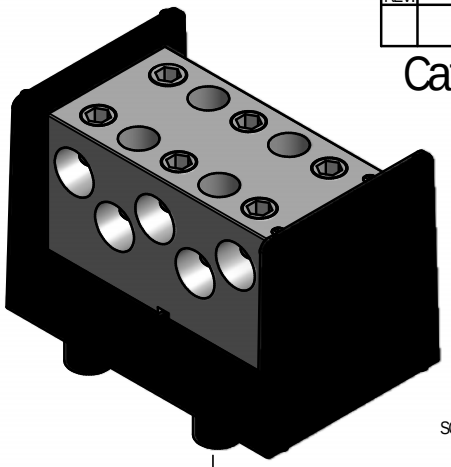

M2825A22T KIT CONSISTS OF
(1) M2825A22T
(1) M2645A00A
(2) CBR0750
(1) CCR0601

SCALE 1 / 2

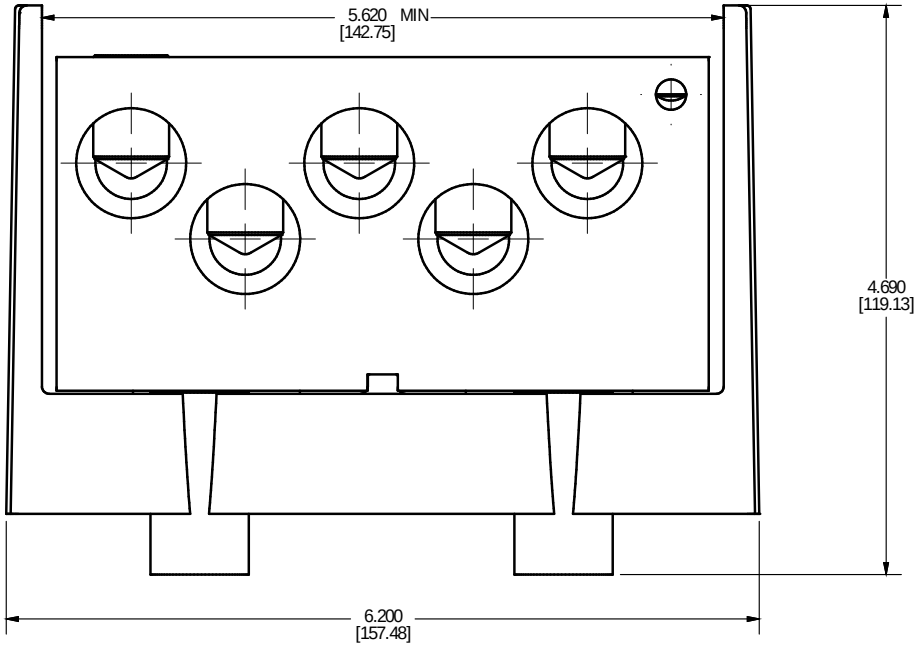

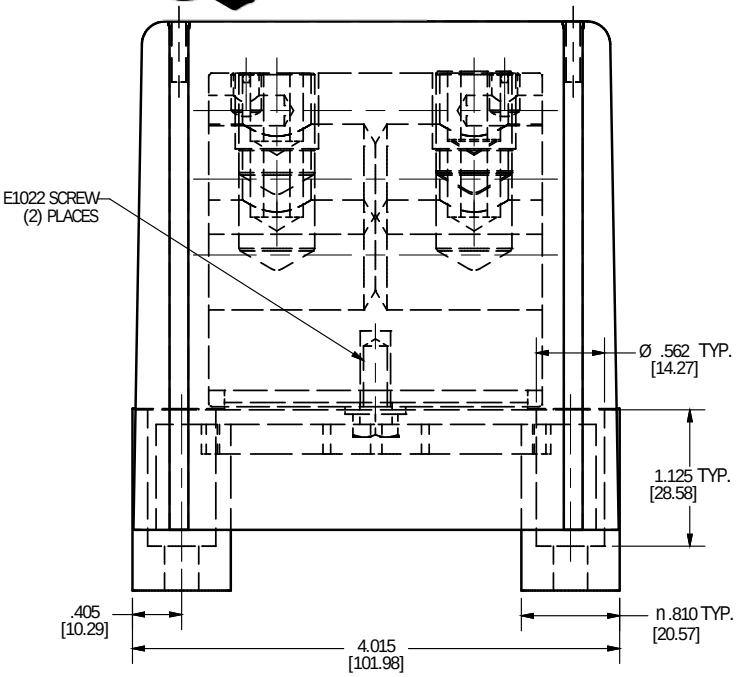

THE INFORMATION CONTAINED WITHIN THIS DOCUMENT IS PROPRIETARY TO ILSCO AND MAY NOT BE DISCLOSED WITHOUT PRIOR WRITTEN CONSENT